NEW GRAETZ

Press Information

Coburg,
December 10th, 2010

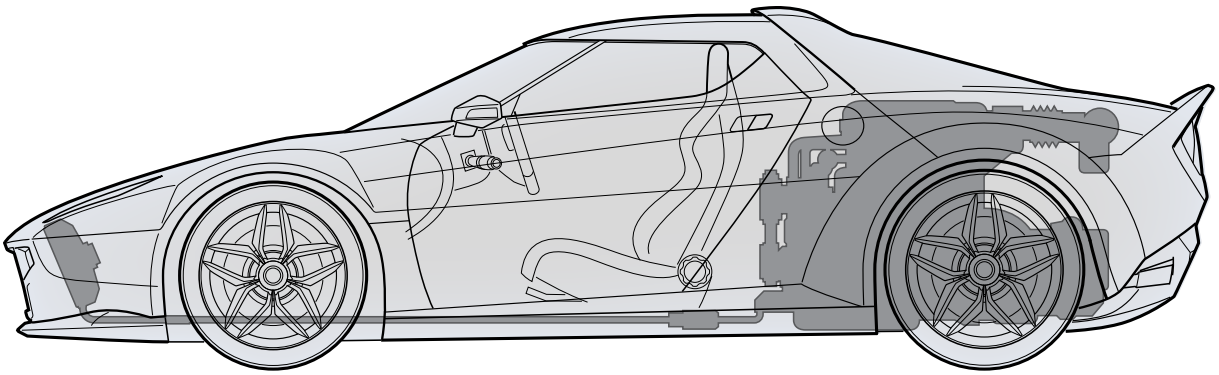

The legend returns.

The NEW STRATOS will be officially presented on 29./30.11.2010, at the Paul Ricard Circuit in Le Castellet.

The legendary Lancia Stratos HF was without a doubt the most spectacular and successful rally car of the 70s. With its thrilling lines and uncompromising design tailored to rally use, the Stratos not only single-handedly rewrote the history of rallying, it won a permanent place in the hearts of its countless fans with its dramatic performance on the world's asphalt and gravel tracks – a performance which included three successive world championship titles.

For Michael Stoschek, a collector and driver of historic racing cars, as well as a successful entrepreneur in the automotive supply industry, the development and construction of a modern version of the Stratos represents the fulfillment of a long-held dream. Back in 2003, the dream had already begun to take on a concrete form; now, at last, it has become a reality:

In November 2010, forty years after the Stratos' presentation at the Turin Motor Show, the New Stratos will be publicly presented for the first time at the Paul Ricard Circuit.

The legend returns.

A retrospective.

It all began in 1970, at the Turin exhibition stand of the automobile designer, Bertone. The extreme Stratos study on display there – a stylistic masterpiece by the designer Marcello Gandini – didn't just excite visitors, but caught the attention of Cesare Fiorio, Lancia's team manager at the time… and refused to let go.

Just one year later, the Stratos assumed its final form when the mid-mounted V4 engine from the Lancia Fulvia was replaced by the significantly more powerful Ferrari Dino V6 engine. The road version of this "flounder" was just 1.08 meters high, mounted on a short steel chassis, and its aerodynamically sophisticated body was molded from reinforced fiberglass. The Stratos' low weight, ideal weight distribution and excellent dynamics provided the optimum conditions for spectacular performance on the international rally tracks, which at the time were still dominated by Alpine and Porsche. However, the results were not so immediately gratifying.

It was only when Lancia works driver Sandro Munari and British Formula 1 driver Mike Parkes got behind the wheel of the ruthless driving machine that success finally materialized. And it did so at lightning speed: in 1973 Sandro Munari took home the first victory for the Stratos HF, and the victories just kept coming in throughout 1974. By the end of 1976, the Stratos had pulled off a hat trick, winning three World Cup titles in a row.

The Italian "flying wedge" also enjoyed success beyond its works deployment: top driver Bernard Darniche brought home an incredible 41 victories in his Stratos - the majority of them for the private team, Chardonnet of France.

The Fiat group's dramatic reduction of the Lancia racing budget in 1979, in favor of the Fiat 131 Abarth, was the death knell for the Stratos works team. From then on, only dedicated private teams took to the track competing against works cars – as in the 1981 Monte Carlo Rally.

Even today, there's hardly any other vehicle that excites audiences at worldwide motor sport events like the Lancia Stratos. Michael and Maximilian Stoschek have also shared in this enthusiasm for many years – not, however, as spectators, but as active motor sports enthusiasts – and they have made the creation of a modern interpretation of this legendary automobile their goal.

The project initiators.

The contemporary New Stratos is a non-commercial project by Michael Stoschek and his son Maximilian Stoschek. Together, they played a fundamental role in determining the technical concept and design of the one-off vehicle. Construction of the car has been underway since autumn 2008, at Pininfarina in Turin, Italy.

Michael Stoschek is chairman of the Brose Group. Brose is the fifth-largest family-owned company among global automotive suppliers.

A keen sportsman, Stoschek won the Carrera Panamericana in 1999, 2001 and 2004, and the 2006 FIA European Rally Championship, driving a 1971 Porsche 911 in both races. The Lancia Stratos Group 4 has a special place amongst the historic rally cars that Stoschek employs for rallies and hillclimbing. Sporting a Marlboro design, the vehicle has been restored over more than a decade, according to the specifications of the 1974 Tour de Corse Andruet/Biche works car.

The decision to develop and build a new, ready-to-run Stratos was inspired by a meeting with Chris Hrabalek, with whom Michael Stoschek became acquainted at the 1986 World Stratos meeting organized in Alta Badia by Stoschek. This was also the impetus behind Stoschek's involvement in the Fenomenon Stratos project, presented at the 2005 Geneva Motor Show, as well as his co-acquisition of the Stratos trademark rights.

In September 2008, Michael and his son Maximilian Stoschek commissioned Pininfarina to build a one-off vehicle. Currently, the New Stratos is one of a kind. Michael and Maximilian Stoschek hold all rights to the vehicle as well as ownership of the tools. Production of an exclusive, limited run under their license is planned.

Design as challenge.

Classic products remain forever style icons. Bertone's Lancia Stratos, with its avant-garde design, is as inimitable now as ever. A modern interpretation of such a classic presents a particular challenge for a designer. It can be difficult to find the right balance between the problem of, on the one hand, drawing too much from the original and, on the other, departing too much from the initial concept.

The design of the New Stratos' body and interior was devised in constant consultation between the clients, Chris Hrabalek and his staff, as well as renowned car designers such as Luca Borgogno, from Pininfarina.

Stoschek himself specified that, "because the design of the Lancia Stratos was characterized by the contrast between round and rectilinear elements, I wanted to see that tension to be carried over into the New Stratos as well."

The assignment was to find a contemporary interpretation of all the quintessential design characteristics of the Lancia Stratos; distinctive features such as the wedge-shaped body, the semi-circular windshield, the striking front end with its central radiator, the rear end with the round tail lights, the roof and rear spoiler and the five-star rims.

After the design direction had been defined, a number of steps were necessary to make the New Stratos a fully-functioning, road-ready sports car. This complex and comprehensive process included not only the production of a prototype, but also the overall development of the car via mathematical modeling, design implementation and verification of each individual component up until the wind tunnel test.

Development of the New Stratos throughout the entire design phase proceeded in conjunction with tests in the Pininfarina wind tunnel – first, in order to validate the basic shape of the car, then, during the last test phase, to refine the aerodynamic details.

Among other things, the body was configured to different height values and pitches, and the effect of these on the perfect balance of the contact pressure between the front and rear axles was measured on the wind tunnel's "rolling road", at speeds between 140 and 200 km/h. The effect of different types of front, roof and rear spoilers on the front and rear downforce was extensively studied and resulted in the current design. Furthermore, various spoiler lips were tested on the underbody, in order to increase the downforce on the front axle. The efficiency of the air intakes and outlets, the cooling system forward of the engine and the brakes were optimized using flow visualization techniques and pressure measurements.

Engineering the New Stratos.

The goal for the development of the Lancia Stratos HF's successor was to once again create a mid-engine sports car with a short wheelbase, low weight and superior agility.

Just as the Lancia Stratos, with its Ferrari Dino V6 engine, was nevertheless a distinct sports car in its own right, the New Stratos is also a distinct development, using components of the Ferrari 430 Scuderia. Almost all of these components have been modified and, as necessary, customized to their new purpose. However, it should also be emphasized that the Ferrari Scuderia already sets the standard amongst the current super sports cars and, as such, provides an excellent basis for further development.

The main features of the New Stratos' engineering can be summarized as follows:

The aluminum chassis was shortened by 20cm and welded to a roll cage made of 40mm-thick FIA FE45 steel. This method significantly increases rigidity, and this, combined with the shifting of the center of gravity towards the front, provides the basis for the vehicle's extraordinary handling characteristics. Both the body – which is 33cm shorter than the Scuderia's – and the interior are constructed entirely of carbon fiber and aluminum. All of the body components of the shell and interior are made of visible carbon. This places especially high demands on the quality of the processing, which was accomplished by **Re Fraschini**.

The centerpiece of the New Stratos is the 4.3L, light alloy V8 engine from the Ferrari F 430 Scuderia, which accelerates the high tech sports car to a speed of 200 km/h in 9.7 seconds. The high performance engine which draws its intake air from the roof spoiler's side openings, has been equipped with a new control unit and a high-performance exhaust system by **Capristo**, including manifold and sports cat exhaust system; it delivers 540 hp and provides a torque of over 500 Nm.

The sequential 6-speed transmission received a new mechanical **Drexler** differential lock, and the modified control electronics now allow for extremely fast gear changes.

The chassis was completely reengineered by the **ZF Sachs** engineers, including integration of new electronic damper calibration, adjustable via

the steering wheel, modified springs and optimized camber and toe values. The 9 and 11-inch wide by 19-inch center lock wheels are fitted with Dunlop Sport Maxx tires, sizes 265/30/19 and 315/30/19.

To fully reap the benefits of the lightweight, torsionally stiff, well-balanced vehicle, the height, camber, toe and caster were changed completely, and, above all, the whole setup.

To this end, stiffer suspension springs were employed alongside new damper calibration with greater differentiation of damper stiffness, adjustable via the steering wheel, as well as an optimum wheel/tire combination identified via testing of various tire brands, sizes and rubber composites.

The Brose-sponsored, Portuguese WTCC and former Formula 1 driver, Tiago Monteiro, was instrumental in the chassis development, working in close collaboration with the engineers from ZF Sachs.

The **Brembo** brake systems, comprised of 398mm-diameter ceramic discs and 6-piston calipers at the front axle, and 350mm-diameter and 4-piston calipers at the rear axle, are equipped with Brembo racing brake pads and steel flex lines.

Finally, the steering has been converted to electro-hydraulic, the new smaller carbon steering wheel displays the exact shift points via differently colored LEDs and the paddle shifters are from the Ferrari 430 racecar.

The battery is a lithium unit in a carbon casing, with a weight of 4.2kg and a capacity of 84 Ah.

The completely redesigned interior consists of a new dashboard with new instruments, new door panels and new racing seats. All components are made of carbon fiber – including the new trim panels. The air conditioning in the new cockpit was built by Ferrari. The lining of the doors is designed to hold driver and front passenger helmets, as in the Lancia Stratos. All external and internal parts made of carbon fiber have been treated with a clear coat mixed with 2 percent black content, which makes the carbon structure visible only up close.

In contrast to the side windows of the Lancia Stratos, whose tilt mechanism allows only partial lowering, the New Stratos has been kitted out with a specially-designed **Brose** window regulator with anti-trap

system. By separating the window adjustment mechanism from its motor, a full lowering of the panes is possible, despite the integrated helmet compartments in the doors. In addition, the variable door stops, seat adjustment and locking systems for the hoods and side doors were developed and manufactured by Brose. Here, not only precision functioning, but also reduction of weight, was of the essence. The new window system alone enabled a reduction of 5.5kg as compared to the F 430.

Despite the approximately 55kg steel roll cage and the 28kg air conditioning unit – which it was necessary to take on due to the large glass surfaces – the New Stratos weighs about 80kg less than the base vehicle. Not only its exceptional performance, but also the incredible driving pleasure that the New Stratos delivers is a direct result of the dry weight of just 1247kg, the excellent balance and the new setup.

The final rehearsal.

This test drive had been in planning for quite awhile: on November 18th the president of Ferrari, Luca di Montezemolo, and his chief test driver, Dario Benuzzi, took the New Stratos out on the Maranello-Fiorano circuit for the first time.

After a few swift laps, it was apparent that Luca di Montezemolo was extremely impressed by the vehicle's precision handling. Several enthusiastic exclamations of "bellissima!" and "congratulazioni!" were heard as he exited the car.

The sincerity of these compliments was further underscored when di Montezemolo made a phone call to his technical director, Roberto Fedeli, and requested his presence at the track so that he, too, could have a closer look at the New Stratos. Fedeli made a thorough inspection of the vehicle together with another technical adviser. When he'd finished, he was also full of praise – not just the perfect engineering, but the numerous details and painstaking workmanship had won over Ferrari's technical director.

In the meantime, Dario Benuzzi got behind the wheel and sped down the racing line, maneuvering the curbs and chicanes of the Ferrari circuit. He, too, was impressed by the New Stratos' razor sharp handling and extremely rigid body, and thanks to his 40 years' experience in sport and race car calibration, the Ferrari legend was also able to give some advice on

how to eliminate a slight agitation of the rear axle that occurred when taking a curve at high speed. As a result, the rear wheels will get a bit more toe-in before the presentation at the Paul Ricard Circuit.

Now, in the afterglow of this extremely positive feedback from Ferrari's top ranks, the highly motivated New Stratos team begins their preparations for the presentation in Le Castellet.

The presentation.

Since the first blurry pictures of New Stratos appeared on the Internet last summer, sports car enthusiasts and motorsport fans from around the world have been waiting impatiently for confirmation of whether the successor to the legendary Lancia Stratos really drives as impressively fast and with as much agility as appearances would suggest.

On November 29th and 30th, the time had come: Michael and Maximilian Stoschek invited a select group of journalists, designers, engineers, race and rally drivers to the premiere in Le Castellet, so they could at last experience the New Stratos live and in action. What's more, the attendees were able to do so not merely from the passenger-side racing seat, but from behind the small sports steering wheel with the Manettino switch. After a few racing-style introductory laps from WTCC driver Tiago Monteiro and Maximilian and Michael Stoschek, New Stratos novices were permitted to personally catapult the 540 hp car onto the racetrack via the 6-speed sequential gearbox.

Not surprisingly, no one passed up on this opportunity, least of all Bernard Darniche, French and European rally champion many times over, and – with 41 victories – the most successful Lancia Stratos driver of all time. He sped his legendary victory car's successor through the tight, twisty section of the Paul Ricard Circuit, just like in the old days. In an interview afterwards, Darniche left no doubt about his enthusiasm for the razor-sharp handling and seamless implementation of even the tiniest steering, brake and gas commands. Furthermore, the exceptionally high quality of workmanship for a one-off vehicle and the level of perfection to be found in every single detail, unanimously impressed the visiting press representatives.

During the dinner afterward, theory followed where practice left off: designers, suspension technicians, development engineers, project managers and, naturally, the initiators themselves, left no question about

the New Stratos' development unanswered in their entertaining lectures and individual conversations. No questions, that is, except the one regarding the possibility of a limited run. However, if demand is sufficient, this question may soon have an answer as well. Interested parties may direct their enquiries to the following e-mail address: **contact@new-stratos.com**.

Find the latest images in the download area of the official website, at http://www.new-stratos.com.

The performance.

The New Stratos, like the racing version of its predecessor, has been extensively geared – down to every last detail – towards lightweight design and performance. Not surprisingly, the specification sheet was therefore extremely ambitious in this regard as well.

The low vehicle weight, the excellent balance and the precision chassis components made possible by the rigid body, were intended not only to provide an exhilarating driving experience, but to provide measurable results in the form of objective data.

As work on the New Stratos continued virtually without pause up until the presentation in Le Castellet, and weather conditions offered no opportunity for performance test runs, these will have be carried out at the next available opportunity.

We expect a power-to-weight ratio below 2.3 kg/hp with an acceleration time from 0-100 km/h of 3.3 seconds and from 0-200 km/h of 9.7 seconds. We expect top marks for braking performance and a benchmark position in the 18- and 36-meter slalom and similar handling tests.

After introducing the new rear axle ratio (crown wheel and pinion 9/45), the top speed will be reduced to 274 km/h, in order to achieve even better acceleration values.

Technical Data

Dimensions	Length	4181 mm
	Width	1971 mm
	Height	1240 mm
	Front track	1668 mm
	Rear track	1701 mm
	Wheelbase	2400 mm
	Front overhang	968 mm
	Rear overhang	813 mm
Weights	Dry Weight	1247 kg
	Weight distribution	44% front 56% rear

Chassis	Aluminium profile	Scuderia chassis, 20 cm shortened
	Welded roll cage	FIA FE45 steel, 40 x 2,5 mm
Body	Full carbon fiber body and interior	Visible carbon (Re Fraschini)
Aerodynamics	Cw (at 140km/h)	0.357
	A	2.07
	Cw x A	0.738
Engine	Cylinders	8
	Engine capacity	4308 cm³
	Engine control unit	Bosch, update
	Exhaust	High-performance system with free-flow manifold and sports catalytic converter (Capristo)
	Maximum power	397 kW (540hp) at 8200 rpm
	Torque	> 500 Nm at 3750 rpm
	Power-to-weight ratio	2.3kg/hp
Gearbox	6 speed sequential gearbox with mechanical variable differential (Drexler)	Fast gear changes at less than 60 milliseconds
	Gear Ratio	4.3 / 5.0
Suspension	Electronic suspension system CDC® (ZF Sachs)	
	Spring front:	Eibach, 120 N/mm
	Spring rear:	Eibach, 180 N/mm
	Dampers:	Hydraulic aluminum twintube shocks with electronic-controlled proportioning valves
	Front/Rear axle	Hub SKF with central fixing
Wheels & Tyres	Center-lock rims size front	9J x 19'' EH2 (Fondmetal)
	Center-lock rims size rear	11J x 19'' EH2 (Fondmetal)
	Offset front rim	ET 38
	Offset rear rim	ET 5
	Tyres front	265 / 30 19'' (Dunlop Sport Maxx)
	Tyres rear	315 / 30 19'' (Dunlop Sport Maxx)

Brakes	Carbon disk front	398 mm x 36 mm (Brembo)
	Carbon disk rear	350 mm x 34 mm (Brembo)
	Brake caliper front	6 pot
	Brake caliper rear	4 pot
	Pads	XAS 4499 (Brembo)
	Brake lines	Steel flex lines
Accessories	Head lights	Bi Xenon (Hella)
	Rear lights	LED-Ferrari 599
	Front wiper system	1 blade
	Exterior mirrors	Electric switch and side indicator
	Window regulator	Lightweight regulator with anti-trap technology (Brose)
	Windshield and side windows	3.76 mm and 4 mm thin window glass
Safety	6-Point Harnesses, 3” Width (Willans)	
Steering system	Electro-hydraulic power steering pump New carbon steering wheel with multicoloured LEDs	
Fuel System	2 outboard aluminium fuel tanks, capacity 90 litres	
Electrics	84 Ah Lithium Ion Battery in carbon housing, weight 4.2 kg	
Electronics modifications	Engine control unit Window regulator (anti-trap) Electronic suspension system CDC® (ZF Sachs) Door locks and bonnets	

40 years between Lancia Stratos and New Stratos

	Lancia Stratos	Lancia Stratos Gr. 4	New Stratos
Length	3710 mm	3710 mm	4181 mm
Width	1750 mm	1810 mm	1971 mm
Height	1114 mm	1100 mm	1240 mm
Dry Weight	980 kg	790 kg	1247 kg
Power	Dino V6 / 2465 cm³ 190 HP	Dino V6 / 2465 cm³ 270 HP	Ferrari V8 / 4308 cm³ 540 HP
Torque	250 Nm	270 Nm	500 Nm
Gearbox	Fully Syncronized 5-speed	Straight-cut 5-speed	Ferrari sequential 6-speed
Deferential Ratio		5 different Ratios, Diff Lock 65%	4.3 / 5.0 Mechanical variable Differential (Drexler)
Tyres front	205/70 14'' Pirelli CN 36	215/55 15'' Pirelli or Michelin	265/30 19'' Dunlop Sport Maxx
Tyres rear	205/70 14'' Pirelli CN 36	335/35 15'' Pirelli or Michelin	315/30 19'' Dunlop Sport Maxx
Rim size front	7,5'' x 14'' Magnesium	8'' x 15'' Magnesium	9J x 19'' Aluminium
Rim size rear	7,5'' x 14'' Magnesium	12'' x 15'' Magnesium	11J x 19'' Aluminium